Name: TubeHead	Manufacturer / Designer: PAiA Electronics	Revision: 11/4/95	Model # 9305

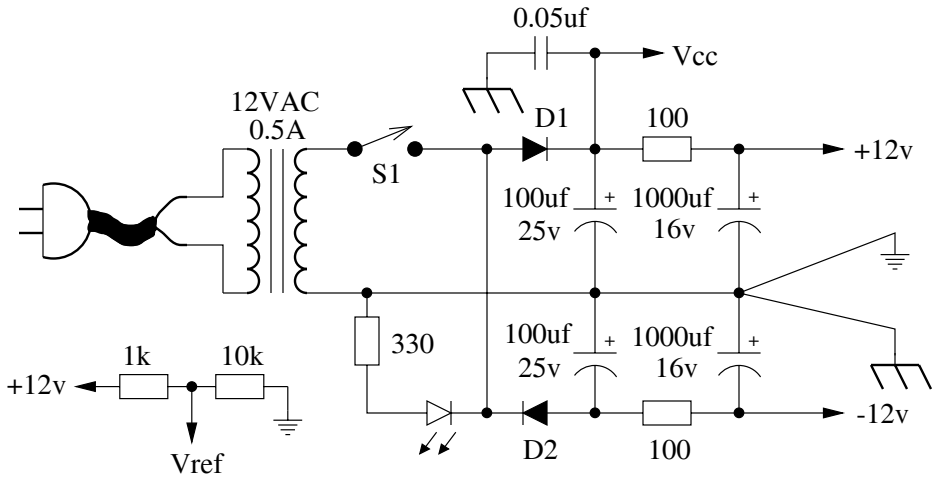

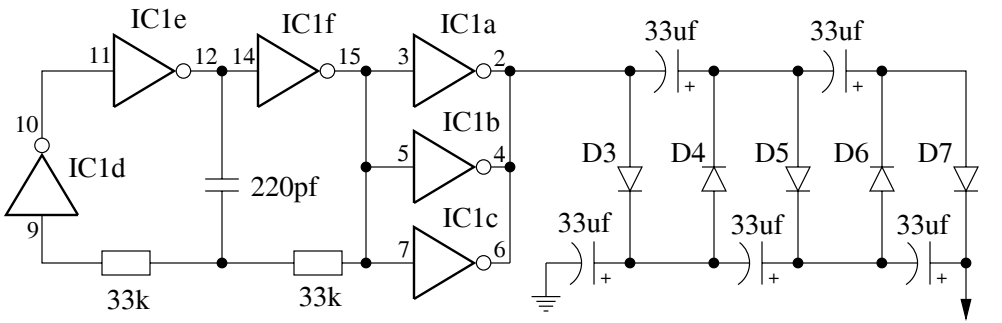

Vcc - Pin 1 IC1
+12v - Pin 8 IC2, IC3, & IC4
-12v - Pin 4 IC2, IC3, & IC4
- Pin 8 IC1

IC1 - 4049 CMOS Hex Inverting Buffer
IC2, 3, & 4 - 5532 Dual Low-Noise OpAmp
D1, 2 - 1N4001
D3, 4, 5, 6, & 7 - 1N4148
All 1uf caps 50v all others 25v unless marked otherwise.
All resistors 1/4W, 5%

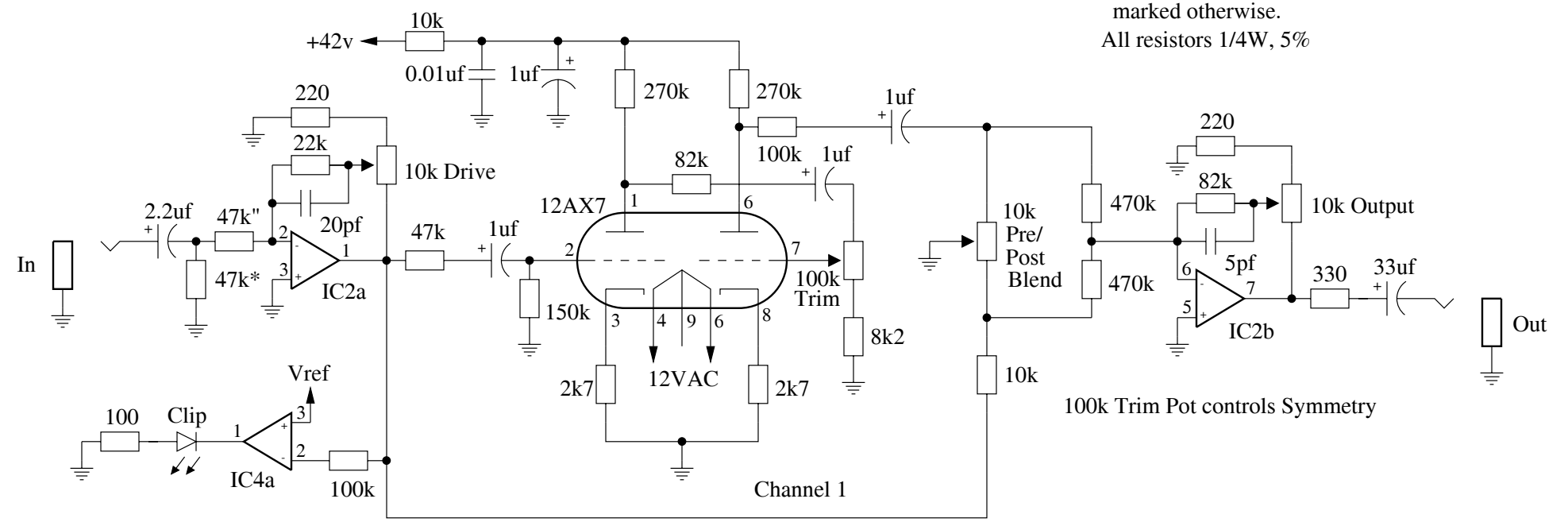

Channel 2 is identicle to Channel 1, and uses IC4b for the clipping meter and IC3 for the input/output driver. The input impedance of the TubeHead is about 20k ohms, which is consistant with most gear like Synths, Effects Processors, Mixers, EQs, and so on. 20k is too low for a proper match with high impedance sources like guitar pickups, but a few minor changes take care of this. To use the TubeHead as a instrument pickup preamp, remove the 47k* resistor and the 20pf cap from the feedback loop of the driving OpAmp. Then change the 47k" resistor to 680k and the 22k resistor in the feedback loop of the driving OpAmp to 100k. Now the TubeHead can be used to warm up a cold sounding guitar amp or just provide a great preamp tone.

Original circuit from December 1993 Electronic Musician